DISTRIBUTION STATEMENT A: Approved for public release; distribution is unlimited.

Remote Release Device for Marine Mammal Electronic Tags

Dr. Roger Hill
8345 154th Ave NE
Redmond, WA 98052
phone: (425) 881-3048 fax: (425) 881-3045 email: Tags@wildlifecomputers.com

Russel D. Andrews, Ph.D.
301 Railway Ave.
P.O. Box 1329
Seward, AL 99664-1329
phone: (907) 224-6344 fax: (907) 224-6371 email: RussA@alaskasealife.org

Contract Number: N00014-09-M-0317
http://www.wildlifecomputers.com
http://www.alaskasealife.org
http://www.eiclabs.com

LONG-TERM GOALS

The long-term goal of this contract is to create a commercially available device capable of carrying a data-logging tag on a marine mammal. On remote instruction, the device releases from the animal allowing retrieval of the tag and its data. In the expanding field of animal tracking, data-logging tags are becoming more advanced—capable of recording gigabytes of information. Currently the only way of retrieving such a large volume of data is through physical recovery of the tag. This remote release device (RRD) allows researchers the ability to conveniently recover their tags with minimal risk to themselves or the animals. The RRD will have various designs and sizes for use on different species of study. Each RRD will have a universal attachment platform or mechanism to allow for recording tags from any manufacturer to take advantage of this new remote release device.

The RRD will implement a revolutionary epoxy known as ElectRelease E3 as its mechanism of release. E3 is an epoxy capable of bonding metallic materials together with holding strengths up to 2500 lb/in^2. In our case, the E3 holds together the top and bottom halves of the release device housing. When electrical current passes through the epoxy, within 10 seconds it degrades to only 5% of its initial holding strength. Using a relatively low-force spring, the mounting plate (attached to the animal) and the top housing (carrying receiver components and the tag) separate completely upon activation of the ElectRelease.

Built around the ElectRelease, the springs, and their housing will be a potted receiver and the power source in the form of rechargeable batteries. The receiver will have the ability to receive “release” signals from the hand-held transmitter device from over 2 miles away. This should be possible with the use of a commercially available Argos transmitter and a custom receiver. Protocol for the signaling system will allow for coded transmissions releasing any or all of a researcher’s devices within seconds.

OBJECTIVES

The objective of Phase I of this contract is to show feasibility of the components of the RRD to allow for a smooth transition into Phase II (not yet started) and prototyping of a fully-integrated device. Based on the anticipated components of the RRD, we identified four distinct items of work that we planned to develop and test during Phase I:

1. An ElectRelease housing to provide a stable, metallic bonding surface and room for springs to separate the top and bottom halves of the housing.
2. A signaling system with the capability of transmitting and demodulating received messages over a 3.5km range.
3. A signaling protocol to identify and activate selected RRD.
4. A custom housing constructed of a lightweight, electrical potting epoxy to encase the ElectRelease housing, receiver components and batteries.

APPROACH

To demonstrate the feasibility of our RRD design, the device was divided into its functional parts and each shown to be independently sufficient at conducting its intended task.

The initial ElectRelease housing (Figure 1) was built just to meet the contract's device footprint specifications of 3in. x 4 in. While the 3in. diameter, stainless steel device would only be appropriate for use with the largest pinnipeds, it provided a great platform for testing and characterizing the E3. Stainless steel was chosen as the conductive bonding surface because it is known to be resistant to corrosion in marine environments. Electricity through the E3 was applied manually in most tests as the signaling system was independently evaluated. Completion and results of these tests allowed for easy scaling as we move to Phase II and prototyping a complete device. Engineering drawings for these prototypes completed near the end of this Phase also took into consideration the results of the tests of these housings.

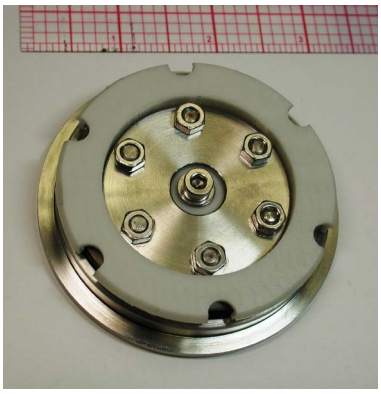

Figure 1: Assembled ElectRelease test housing. Housing is all stainless steel except white, insulating component allowing current flow through the ElectRelease bond.

The most difficult of the objectives proved to be creating a signaling device capable of meeting the range requirement. With many marine mammal species migrating throughout the world's oceans and indiscriminately crossing international borders, the release device needed a universally accepted signaling frequency. Few frequencies exist to provide the range desired internationally without restriction. Although many frequencies were under consideration, we chose the Argos frequency for our signaling system.

The signaling system was first designed and then tested over various distances of open water to simulate field use. A Wildlife Computers Cricket board became the transmitting device in this test. The receiver had to be constructed from scratch as small OEM Argos receiver boards are not commercially available.

Following successful testing of the ElectRelease housing and the signaling system, we created a protocol for the signaling system and designed and scaled new housings. The signaling protocol allowed for a user to target one or many of his RRDs for release through the transmitted message. The receiver onboard the RRD needed to be able to interpret the message and, if instructed to release, send current through the ElectRelease to degrade the bond while notifying the user of receipt of the message.

The designs of prototype housings were considerably smaller than those of the test housings used for verifying the ElectRelease properties. The prototype designs were sized to provide a popular size for the majority of cetacean and pinniped species. The design has the ability to be scaled.

WORK COMPLETED

Work on Phase I began with the construction of test housings for the ElectRelease. The device was large at 3in. diameter and bulky weighing nearly 2lb. However this test housing was not made for use on animals but instead to characterize the ElectRelease's properties and to test the design of the holding/releasing mechanism. The housing had two stainless steel components bonded with ElectRelease and two different types of springs applying a constant force roughly 20% of the bonding strength in opposition to the bond (Figure 2(Left)). The ElectRelease was optimized for curing conditions and bonding thickness. The bond was evaluated through a static pull test conducted on the housings without springs in place. Holding strength was investigated at cold (0^oC) and warm (40^oC) temperatures. The bond strength was also evaluated with various durations and voltages of electricity applied to the bond through the housing (Figure 2(Right)). Overall release time was also considered with the springs in place.

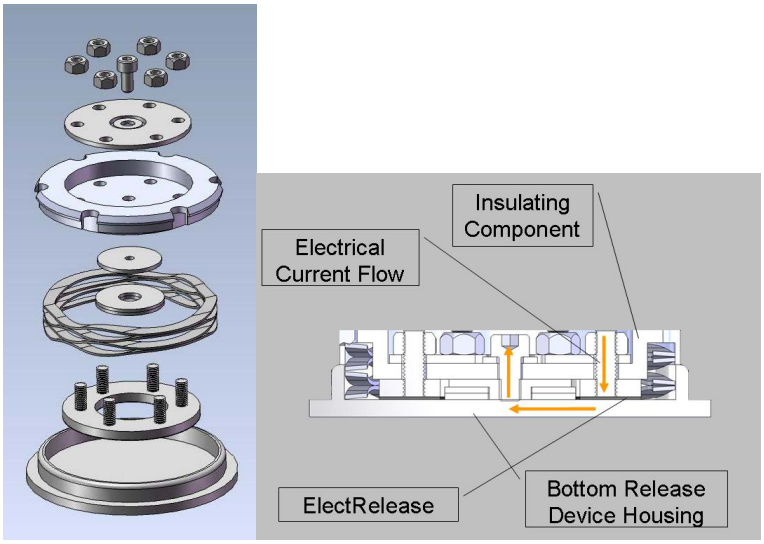

Figure 2: (Left) Exploded view of the ElectRelease test housing. (Right) Diagram of the current flow through the ElectRelease test housing.

The signaling system was designed around the concept of using the Argos frequency band for transmitting the release instructions to the RRD. As Wildlife Computers is experienced in the production of animal tracking tags that transmit through Argos, we used a preexisting Argos transmitter board for receiver verification. A complete, unmodified, production satellite tag was used in verifying the range of the signaling system in this feasibility study. For this Phase, the Argos RF circuit board will be used independently of the tag and modified to better suit the needs of the project. With no small Argos receiver boards available, one was created from a Microchip rfRXD0420 circuit board. The receiver used in initial range tests was larger than the desired dimensions of a prototype receiver to allow for easy modification during development. Once the system's range and demodulation ability was confirmed, the board was laid out again to achieve a more compact design.

The signaling system protocol will determine how the transmitter indicates which RRD(s) will be activated. This message was coded into the standard 32-bit Argos message structure sent by the transmitter. It allows for a researcher to release one, a group, or all of his RRDs within range of the transmitting device. When a targeted tag is sent a release message, the receiver's microcontroller, a Microchip PIC18LF4520, does two important tasks. First it will send a continuous current through the ElectRelease epoxy to begin its degradation. Then it instructs the integrated VHF pinger to increase its ping rate giving notice to the researcher that the message was successfully received. Although not to be implemented until prototype units are produced in Phase II, this protocol was an important development prior to prototyping.

The prototype RRD housings were designed based on the conclusions drawn from tests of the test housings and ElectRelease. Two distinct housings were developed: one for use with back-mounted, pinniped tags (Figure 4(Left)) and the other for use with towed, cetacean tags (Figure 4(Right)). These shapes scale to fit different sizes and species of subject. That said these prototypes have significantly smaller and lighter ElectRelease housings than those of the initial test housings. The tag-attachment method varies between the two designs as the back-mounted RRD has a large, flat surface to mount any tag successfully. The inline RRD has an eyelet for attaching a towed tag via leader (the second

eyelet would be tethered to a dart in the cetacean). Both RRD designs have two antennas—one for receiving the release command in an Argos message, the other for sending signals from the VHF pinger.

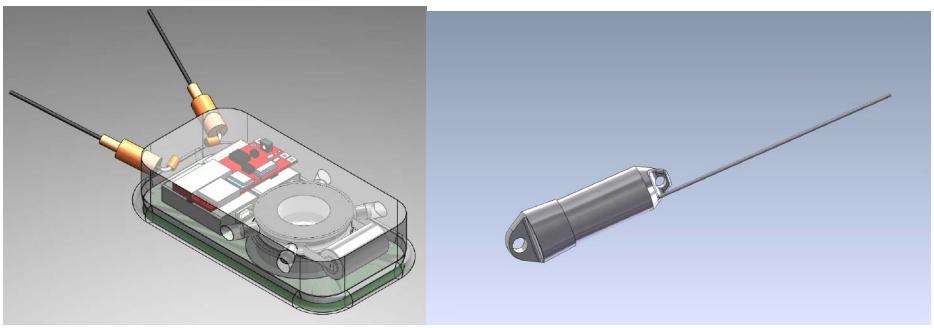

Figure 4: Prototype images of (Left) back-mounted and (Right) towed RRDs.

RESULTS

Testing the ElectRelease with the stainless steel housing was important in showing how the epoxy would behave. E3 had been characterized well by its manufacturer EIC Labs, but only for use with aluminum. Although EIC Labs stated that E3 would work with any conductive surface, it was not clear whether the behavior would be consistent across mediums. The bonding strength to the stainless steel was determined to be ~1200lb/in^2, half that of the aluminum specifications provided by EIC. Fortunately, the degradation time was also much less taking only 8 seconds on average to reach <20% of the original bond strength (using 3 x 9v batteries) as compared to 30+ seconds with aluminum. Degradation was tested with different applied voltage levels. Degradation is based on the total charge supplied to the bond. As expected, higher voltages provided higher current and faster release times. Both the release time and bonding strength of ElectRelease were evaluated in cold (0°C) and warm (40°C) conditions. No significant change to the bond strength was noticed with varying temperature. The temperature did have a noted effect on the release times. Releases occurred within 3 seconds at warm temperatures and took an average of two minutes at cold temperatures. With higher applied voltages we were able to reduce the release times under cold conditions. The values from these tests helped in the development of prototype-ready RRDs.

The receiver for the signaling system was developed by modifying the Microchip rfRXD0420 circuit board to demodulate messages sent on the Argos frequency (401.650MHz). We created a proprietary board design for the interpretation of Argos signals. While the board was shown to properly receive and decode low-power signals in a laboratory setting, the instrument was fitted with an antenna and taken to a lake for real-world open-water testing with an actual Argos signal sent from a Cricket transmitter board. The receiver was tested at distances of 1.5, 2.9, and 4.5km. The entire distance was over water and the transmitter and receiver were no more than a few meters off the water's surface for all tests. The transmitter used a whip antenna at a power of 400mW—well below the 5W limit for the Argos frequency. At all distances, the signal was successfully received and interpreted by the receiver. This was well beyond the 3.5km desired range. The performance left room to increase signal strength using more power during transmission or to fit a Yagi directional antenna to the transmitter to provide higher gain. While neither modification is anticipated, the ability to do so gives flexibility entering Phase II.

Although we have developed the protocol for transmitting and receiving the release commands, this portion of the design is not yet testable. The protocol will be introduced in the prototype transmitters and receivers which will be constructed in Phase II of the project.

We completed designs of the prototype RRDs that feature scaled-down ElectRelease test housings and receiver boards encased in a waterproof epoxy (Fig. 4). The ElectRelease test housing was reduced in size from 3in. in diameter to 1.25in. for the back-mounted RRD (even smaller in the inline design). The bonding area of the ElectRelease within the housing was also reduced from $1.92in^2$ to $0.26in^2$ reducing the bonding strength from ~2300lb. to ~300lb. Because of our design, which isolates the ElectRelease bond from most outside forces, this is more than enough strength for a typical pinniped, and the design is scalable for larger animals requiring greater hold due to behavioral or size requirements.

IMPACT/APPLICATIONS

Understanding the potential for impacts of naval activities on protected species of marine mammals and mitigating such impacts, all requires information on behavior, movements and habitat use. The development of a useful remote release device that facilitates the use of archival monitoring tags will make a significant contribution to the ability of researchers to study marine mammals that are of interest to the Navy. Our success in demonstrating the feasibility of our Phase I approach will be instrumental in moving into Phase II and creating RRDs that are useful to the community of marine mammal researchers.

RELATED PROJECTS

None.