DISTRIBUTION STATEMENT A: Approved for public release; distribution is unlimited.

Acoustic Float for Marine Mammal Monitoring

Christopher Jones
Applied Physics Laboratory
University of Washington
1013 NE 40th Street
Seattle, WA 98105
phone: (206) 543-1615 fax: (206) 543-6785 email: cjones@apl.washington.edu

Haru Matsumoto, David K. Mellinger, and Robert P. Dziak
Cooperative Inst. for Marine Resources Studies, Oregon State University
2030 SE Marine Science Dr., Newport, OR 97365
phone: (541) 867-0272 fax: (541) 867-3907 email: Haru.Matsumoto@oregonstate.edu
phone: (541) 867-0372 fax: (541) 867-3907 email: david.mellinger@oregonstate.edu
phone: (541) 867-0175 fax: (541) 867-3907 email: robert.p.dziak@oregonstate.edu

Award Number: N000140811213

LONG-TERM GOALS

Our goal is to develop an inexpensive acoustic profiler technology, *QUEphone* (***Qu****asi-****E****ulerian* ***phone***), which allows accurate detection of the beaked whales and reporting in a short time frame by monitoring for the vocalizations of the target species. By converting a commercially available profiler float to a mobile platform and installing a sophisticated detection algorithm on a high-power DSP, and testing the *QUEphones* in appropriate beaked whale habitat, we were able to compare beaked whale detection results against the Navy's well-established acoustic surveillance system and verify the correct operation of the system. Future work entails making *QUEphones* easy to operate so that an area can be monitored in advance of an operation by number of these relatively inexpensive instruments for the presence of beaked whales or other species of concern.

OBJECTIVES

The Navy's interest is to minimize the impacts of its operations on marine mammals and to mitigate any adverse impacts those operations may have. Harm to marine mammals has been an especially prominent issue for mid-frequency sonars and beaked whales, after some of these whales stranded and died at times and places close to naval exercises [*Barlow et al*. 2006]. Currently under development by several teams, is to equip several ocean gliders with hydrophones and marine mammal call-detection software and send them out to monitor in real time, but the gliders are relatively expensive, at upwards of $100,000 each [*Rogers et al.*, 2004].

A vertical profiler float has been in existence for the last 20 years, and approximately 6000 APEX floats alone have been produced as of August, 2010. This float has been a relatively inexpensive and reliable tool for oceanogrphers [*Kobayashi et al., 2006*]. They also can dive to 2000 m whereass Slocum gilder and Seaglider are rated for 1000 m. The capability of profiling to 2000 m may be

advantageous to monitor species, including beaked whales, which are known to dive deeper than 1000 m. Our strategy is to take advantage of the most widely used profiler, APEX from the Webb Research, and combine it with the proven acoustic detection and satellite communication technologies to detect and report the presence of endangered marine mammals species in a short time frame.

APPROACH

We have divided our task into 9 phases as follows:

1. Selection of components
    - float and hydrophone (Matsumoto, OSU)
    - DSP processor (Jones, UW)
2. Develop low-power and wide-band pre-amp (Matsumoto, OSU)
3. Develop communication and serial interface with the APEX (Matsumoto, OSU)
4. Develop software for beaked whale call detection (Mellinger, OSU)
5. Develop DSP hardware and software (Jones, UW)
6. System integration (Matsumoto, Jones, OSU/UW)
7. Lake test (Jones, Matsumoto. UW/OSU)
    - UW Acoustic barge
    - Newport reservoir
8. Sea trials (Matsumoto, Mellinger, Dziak, OSU)
    - Kona, Hawaii (March, 2010)
    - AUTEC, Bahama (June, 2010)
9. Data analysis (Matsumoto, Jones, Mellinger, Dziak, OSU/UW)

WORK COMPLETED

A. Developed *QUEphone* interface (Matsumoto, OSU)

Pre-amp is optimized for the noise and high sensitivity of the hydrophone to of 3 kHz-48kHz bandwidth with 42 dB gain (3”x3.5” picture in Fig. 1). The APEX float controller source code was significantly modified to receive and send ASCII files through the secure NOAA/PMEL Rudics web interface for near real-time monitoring.

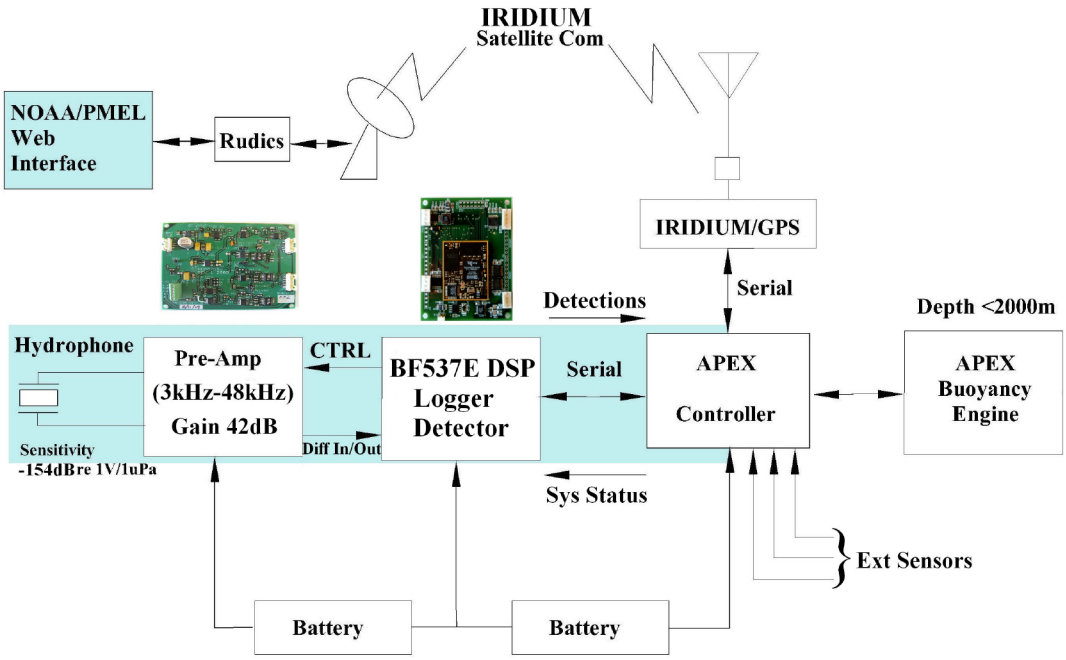

Figure 1. Block diagram of the QUEphone Acoustic Float, including the pre-amp, Blackfin BF537E DSP, APEX float controller, buoyancy engine, and Iridium/GPS modem. The blue shaded area is the sub-systems developed and integrated by OSU and APL-UW.

B. Detection software development (Mellinger and Klinck, OSU)
The Klink-Mellinger detection algorithm (v. 1) for the *QUEphone* has been implemented in the DSP board and is operational. The ***E**nergy **R**atio **M**apping **A**lgorithm (**ERMA**)* was developed at OSU to reduce the number of false positive detections while keeping computational cost low (*Klinck and Mellinger, 2009*). *ERMA* analyzes clicks produced by all odontocete species occurring in an area (the geographic species mix) and evaluates the best-performing energy ratio for a target species. The number of detected clicks, their inter-click intervals (ICIs) and detection amplitudes are also used to further reduce the number of false positive detections.

C. DSP Hardware and Software Development (Jones, APL-UW)
The ERMA detection algorithm was successfully transported and implemented on the *Blackfin BF537E* based DPS board developed by C. Jones at APL-UW. Mellinger/Klinck (OSU) have assisted Jones in translating his program into C to make the code run efficiently both in time and power. The DSP subsystem design and fabrication is complete (picture in Fig. 1). Hardware testing, software development, and system integration with the APEX float is complete.

D. System integration (Matsumoto and Jones, OSU and APL-UW)
Fig. 2 shows the assembled *QUEphone* undergoing bench tests in the lab, including simulated dive/ascent cycles using high pressure gas to pressurize the sensor, and communications with NOAA's Rudics data server. As of September 2010, fabrications and testing of three *QUEphones* (Q1, Q2, and Q3) is complete and below is the current system configuration

- 125-kHz sigma-delta 1-ch A/D
- Single omni-directional hydrophone with 3k-48kHz pre-amp
- Blackfin DSP BF537F (@500 MHz µCLinux operating system)
- Logging capacity: 64-GB (upgradable to 3xFLAC)
- Battery - Alk (2-weeks), Lithium (~40 days)
- Detector (Klinck-Mellinger detector v.1.)
- DSP turn on/off depth programmable
- Mode of operation
  *report once a day at a fixed time
  *report when detections exceed the threshold
  *report at regular interval
- Report system engineering status, number of detections at 30-min increment
- Vertical speed ~8 cm/s
- Maximum depth 2000 m
- Communication - IRIDIUM Rudics through NOAA web interface

Figure 2. Assembled QUEphone.
Iridium/GPS antenna and hydrophone are mounted on top of the endcap.

E. Fresh Water Lake Test (Nov. 2009, Jones and Matsumoto, UW and OSU)
On November 4-5, 2009, a 2-day fresh water test was conducted on Lake Washington, Seattle, WA. The test demonstrated the effectiveness of the algorithm for detecting beaked whales clicks in the simulated acoustic environment. As for system calibration, theoretical and measured received signal levels matched within 2 dB (expected 132 dB and actual was 134 dB re µPa). Considering the beam pattern of the projector was not omni-directional under near-field condition, a 2-dB error was considered negligible.

F. Sea Trials

Kona test (March 2010, Matsumoto, OSU)

Prior to the AUTEC validation test in June, a first engineering test in deep water was conducted off Kona, Hawaii in March, 2010. Q1 and Q3 were deployed on March 17 and recovered three days later on March 20 after repeating 1000-m dives once a day and transmitting engineering log, and detection counts to the NOAA Rudics site. The total distance that each *QUEphone* drifted for three days was approximately 15 km at ~5 cm/s. Q1 detected approximately 2600 and Q3 detected 3100 clicks during the three-day trial. This engineering test provided a rare opportunity to compare the detection results of the two systems for each day. An extensive post-processing of the data confirmed that there were no beaked whale calls during the engineering test and that these clicks were from smaller marine mammals (dolphins).

AUTEC Range validation test (June 2010, Matsumoto, Mellinger and Klinck, OSU)

Collaborating with the Seaglider group at the UW-APL, two *QUEphones* were deployed in the AUTEC range from the R/V *Ranger* on June 7. The two *QUEphones* (Q1 and Q3) were operated for approximately 4 days and recovered on June 11, 2010. Both drifted eastward approximately 6 km at ~ 2 cm/s. For the duration of the test, beaked whale vocal activity at the range was closely monitored with the AUTEC bottom-moored hydrophone network and the M3R passive-acoustic surveillance system operated by Susan Jarvis of NUWC Newport (RI). A comparison of the *QUEphone* and M3R data showed that the timing as well as the counts of detections matched well. Furthermore the results clearly indicate that the likelihood of detections is strongly dependent on the distance between source and receiver as well as receiver depth. These results coincide with the results published in Zimmer *et al.* 2009.

G. Data analysis of AUTEC experiment

Figs. 4 and 5 show the comparisons of detections made by Q1/Q3 and AUTEC fixed hydrophone 28. The two *QUEphones* repeated five dive cycles and surfaced daily at a pre-defined time (2 PM and 3 PM GMT). The pink lines indicate the estimated distance of the instrument relative to the closest hydrophone - in both cases hydrophone 28. The range in meters was calculated by applying a linear drift of the *QUEphone* between surface positions. The distance between the *QUEphones* and hydrophone 28 are approximations since the exact coordinates of either system are not known. In the case of Q1 (Fig. 4), the *QUEphone* started monitoring at 7 km in range from hydrophone 28 and ended at 1.5 km. The grey shaded lines indicate when the acoustic system was online.

Compared to hydrophone 28 detections, Q1 and Q3 missed a few bouts of calls because the acoustic system was powered off at depths shallower than 450 m. Most beaked whale detections occurred when Q1 and Q3 were at depth. Since the maximum depth of the *QUEphone* is 2000 m, it may be advantageous to operate the instrument deeper than 1000 m, e.g., between 1500 m and 2000 m. Fig. 4 and 5 indicate that beaked whales are reliably detected at distances < 4 km, a distance which matches the results published by Zimmer *et al.* 2009.

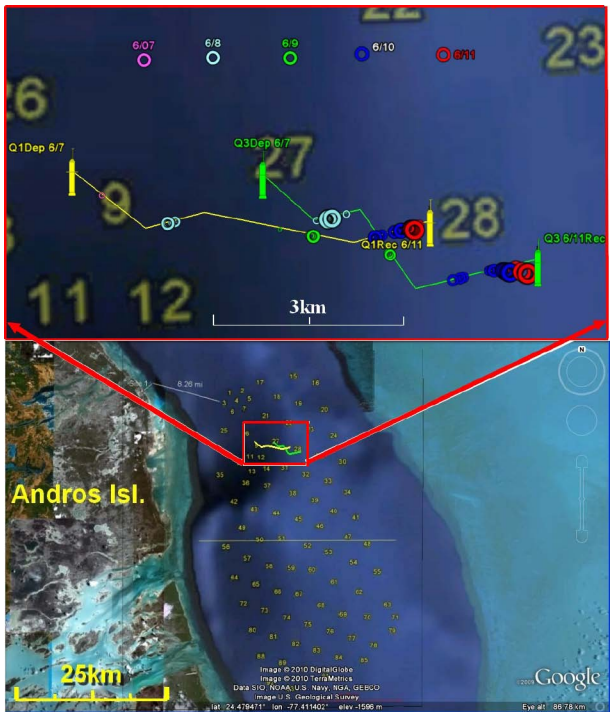

Figure 3. The Tongue of the Ocean (TOT) off Andros Island, Bahamas, and adjacent AUTEC range (bottom). Q1 (yellow track starting near the hydrophone 9 on 6/7) and Q3 (green path starting near the hydrophone 27 on 6/7) were operated near the center of the northern array where the depth was deepest. Q1 and Q3 paths with numbers of detections were overlaid at the estimated locations. The size of each circle is proportional to the logarithm of detection counts. The circles are color coded by the dates. Most of the detections occurred on 6/8 (light blue), 6/10 (blue) and 6/11 (red) near hydrophone 28. Map based on Moretti 2006.

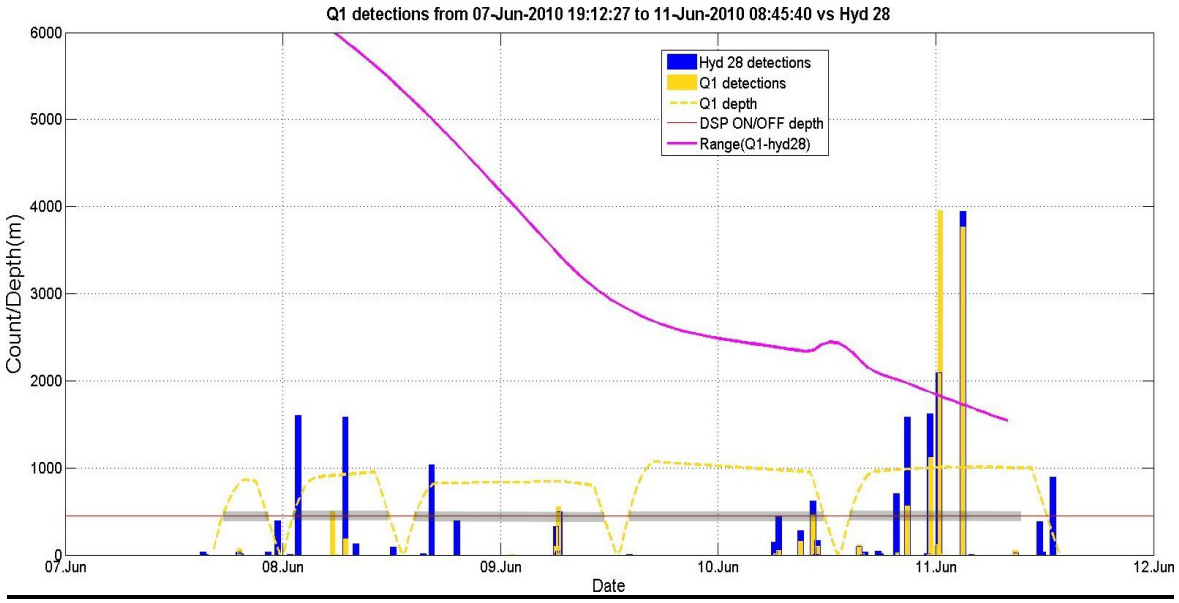

Figure 4. Count of Q1's detections (yellow bars) vs. AUTEC fixed hydrophone 28 detections (blue bars). Yellow dashed line is depth of Q1 in meters. Grey shaded horizontal lines indicate the periods when the DSP was on (below 450 m). Pink line shows the approximate range in meters of Q1 from fixed hydrophone 28. (Note that the Y-axis indicates both counts of detections (yellow and blue bars) and range and depth meters (yellow and pink lines).)

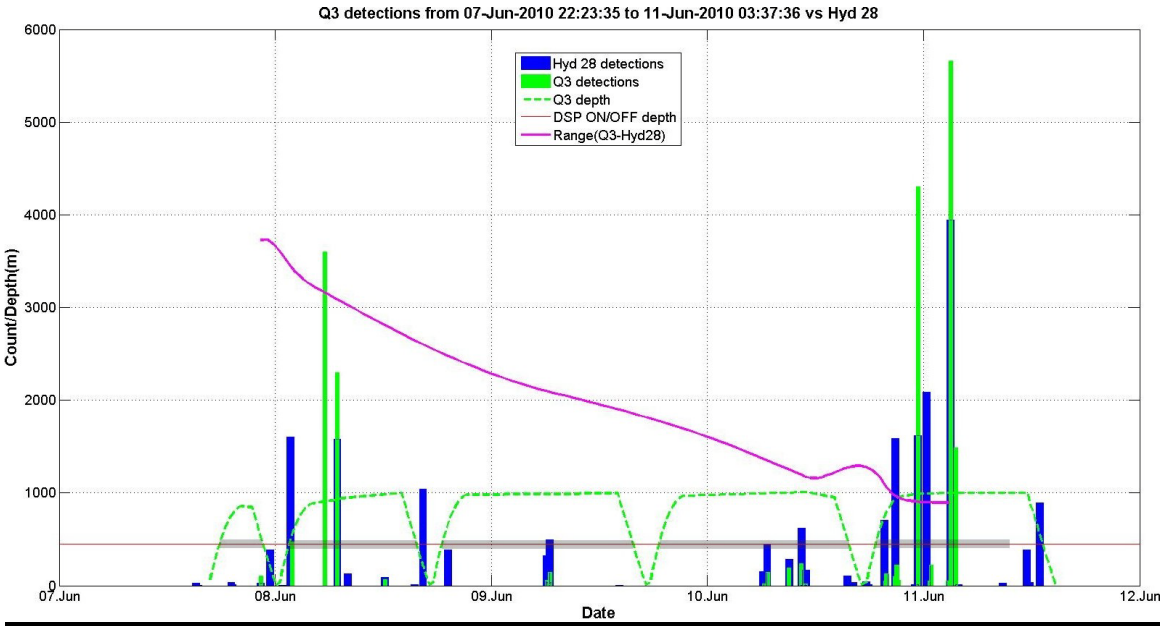

Figure 5. Q3's detections (green bars) vs. AUTEC fixed hydrophone 28 detections (blue bars). Green dashed line is the depth of Q3. Grey shaded horizontal lines at indicate the periods when the DSP was on (450 m). Pink line shows the approximate range of Q3 from fixed hydrophone 28. (Note that the Y-axis indicates both counts of detections (green and blue bars) and range and depth meters (green and pink lines).)

Table 1. Daily counts of detections by QUEphones and the range hydrophone 28 from June 7 through June 11, 2010.

Date	Q1	Q3	H28
7-Jun	72	107	389
8-Jun	680	6433	4844
9-Jun	661	214	882
10-Jun	2613	5478	5788
11-Jun	7911	7484	6036
Total	11937	19716	17939

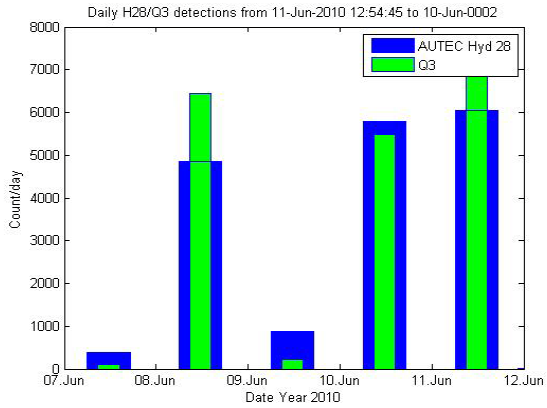

Figure 6. Daily counts of beaked whale detections by Q3 (green) and M3R AUTEC hydrophone 28 (dark blue). Q3's gain was 6 dB higher than Q1.

Table 1 shows the daily counts of the detections by *QUEphones* and range hydrophone 28. The numbers some days are less or more than the detections counted by the hydrophone 28, but overall the numbers are comparable, particularly Q3. Q3 detections were the closest to the range hydrophone 28 (Fig. 6). Signal detection depends on the signal-to-noise ratio, which means it depends not only on range but also on the orientation of the whale's narrow emission beam (typically less than 5 degrees [*Zimmer 2008*]). In regard to the total number of the detections, Q1 detected less (about a half) than Q3. Q3's gain was 6 dB higher, which may have contributed to statistical counts.

RESULTS

Development of the *QUEphone* is complete and three *QUEphones* are ready for the future deployment opportunities. Two *QUEphones* with Klink-Mellinger detector (ver. 1) were tested off Hawaii and later deployed in the AUTEC range for verification of the results against the M3R passive-acoustic surveillance system. The numbers of detections are comparable to that of the M3R data and times of the detections match, confirming the reliability of the detector and usefulness of the profiler float technology as an acoustic platform. The AUTEC result indicates overall the detection depends not only on range but also on the whale's acoustic beam direction. The system gain also affected the total number of detections, which suggests further adjustment of the gain may be needed for the optimum performance.

IMPACT/APPLICATIONS

The *QUEphone* is a relatively inexpensive tool that allows the US Navy to acoustically monitor the exercise area for the beaked or other endangered species and give proper warning in a relatively short time frame when these animals are present. By deploying several of them at an appropriate spacing (e.g., 4 km) for optimum detection, cost-effective monitoring of a relatively large area may be possible. If accurate times of the detections are also transmitted from multiple *QUEphones*, it may be possible to locate the whales in 2-D. A deep diving capability of *QUEphone* (2000 m) may be useful for monitoring beaked whales which scan for foraging with extremely narrow beams within a limited range of elevation or azimuthal angles.

RELATED PROJECTS

"Automatic Detection of Beaked Whales from Acoustic Seagliders", ONR grant # N00014-08-1-1082. This project is also using the ERMA detection method, configured differently because it will be operated with different species.

REFERENCES

Barlow, J., M.C. Ferguson, W.F. Perrin, L. Balance, T. Gerrodette, G. Joyce, C.D. Kandia, V., and Y. Stylianou. 2006. Detection of sperm whale clicks based on the Teager-Kaiser energy operator. Appl. Acoust. 67:1144-1163.

Rogers, E.O., G. F. Denny, and Paul J. Farely, "Underwater acoustic glider," IEEE Ocean, 2241-2244, 2004.

Klinck, H., and Mellinger, D. K. (2009). A real-time detection system for odontocete echolocation clicks in the low-energy processing environment of an acoustic glider. In: Journal of the Acoustical Society of America, 125(4), p. 2548.

Kobayashi, T., "Estimation of the Average Life span of the Argos Floats," Argo Science Workshop, Venice, 2006.

Moretti, D., DiMarzio, N., Morrissey, R., and Jarvis, S., "Estimating the density of Blainville's beaked whale (*Mesoplodon densirostris*) in the Tongue of the Ocean (TOTO) using passive acoustics," *Proceedings of the MTS/IEEE OCEANS 2006 Boston*, 2006.

Zimmer, W. M. X., Harwood, J., Tyack, P. L., Johnson, M. P., Madsen, P. T., "Passive acoustic detection of deep-diving beaked whales," *J. Acoust. Soc., Am.,* 124(5), pp. 2823-2832, Nov. 2008.