Novel Acoustic Techniques for Assessing Fish Schooling in the Context of an Operational Ocean Observatory

Jeff Condiotty
Kongsberg Simrad USA
19210 33rd Ave West
Lynwood, WA 98036
phone: (425) 778-8821 fax: (425) 771-7211 email: jeff.condiotty@simrad.com

Award Number: N000140510654
http://oregonstate.edu/~benoitbk/nopp1.html

LONG-TERM GOALS

Fish aggregation is important in terms of biology, fisheries, and measurement, quantitative analyses of gregarious movement behaviors remain relatively rare (Turchin 1989). Fish aggregation has most often been studied in easily accessed fish or fish easily maintained in the laboratory such as minnows and dace (see a review in Pitcher and Parrish 1993). Measurements of fish aggregations are often difficult, particularly in pelagic environments. Our goal is to develop new acoustic techniques that have the potential to serve as measurement tools to quantify this ubiquitous and important behavior.

OBJECTIVES

This project brings together a team with expertise in acoustics, engineering, biology, fisheries, and oceanography to develop and apply acoustic techniques to measure schooling in pelagic fish. We will combine traditional, split-beam fisheries echosounding techniques and direct sampling with new acoustic techniques and new platforms in a study area monitored by an existing operational ocean observatory. To measure synoptic distributions of fish schools we will collect mid-frequency back- and bistatic-scattering from fish using a unique horizontally oriented multibeam system. We will experimentally evaluate the use of ship-board and moored mid-frequency sonar for the detection and resolution of fish schools at long range (kilometer scale) in the context of propagation and scattering in a shallow water waveguide. Toward the goal of integrating mid to geometric frequency scattering measurements, we will observe the relationship of high frequency echosounder and multibeam measurements to mid-frequency short-range measurements (direct path scattering) and mid-frequency long-range measurements (waveguide scattering). In doing so, we will correlate the results of the longer-range measurement (less understood and more complex scattering geometries) with more traditional (better understood) higher frequency and geometric scattering regimes and techniques. We will also investigate the ability of higher frequency multibeam techniques to assess the internal structure of detected schools. A 200 kHz multibeam capable of collecting water column data will be integrated into an autonomous underwater vehicle (REMUS). Deploying this cutting edge instrument on an autonomous platform will allow us to access fish at greater depths, while sampling the high spatial resolution necessary to measure the geometry of fish in an aggregation. The success of REMUS-deployed instruments was demonstrated mapping bioluminescence patches at the ONR and NOPP-sponsored experiments. During our field efforts in years 2 and 3 of the project, the multibeam-equipped AUV will fly in a grid within the range of the mid-frequency, horizontally looking multibeam sonar while a surface ship collects echosounder data at multiple frequencies and conducts

collection trawls. The intensive acoustic sampling from the three platforms will permit us to integrate data on mid- and high frequency acoustic scattering, providing information on basic acoustics, biological sources of acoustic clutter, and schooling of fish. All field sampling will be conducted within the New Jersey Shelf Observing System (NJ SOS), which provides real-time data throughout the Mid-Atlantic Bight (MAB). The surveys will be positioned adaptively using real-time data collected with the international constellation of ocean color satellites, a nested grid of HF radars, and an operational fleet of autonomous Webb Gliders. The goal is to use the environmental data to optimize ship and AUV acoustic surveys by using the observatory to identify specific water masses, frontal boundaries, and subsurface phytoplankton plumes. The surveys will then identify and track schools of fish associated with this hydrographic and biological structure. This approach will provide a context for the fish schooling information, allowing us to begin to look for correlations between the fish biology and environmental variability. Results will be passed into the Ocean Biogeographic Information system (OBIS) ensuring that biological data is integrated into the Census of Marine Life.

APPROACH

- *Develop new acoustic techniques to measure aggregations of fish*
  - High-frequency multibeam sonar on autonomous underwater vehicle (AUV)
    - Observe individual schools over short ranges
    - Quantify geometry inside of school
  - Mid-frequency multibeam sonar
    - Image large volume of water
    - Quantify gross school movement
    - Back and bistatic-scattering

- *Relate mid-frequency acoustic bistatic and back scattering to high-frequency multibeam and split-beam backscatter and both to fish activity*
  - Determine how fish distribution (school structure) is related to long-range acoustic scattering
  - Use traditional techniques with new methods to determine which fish are present, in what numbers, and how they are distributed
  - Determine how variability within a school affects acoustic scattering

- *Relate fish causing acoustic scattering to physical and biological oceanography*
  - Characterize environment for different fish schools using the New Jersey Shelf Observing System

- *Obtain time series data*
  - Diel patterns in distribution of fish
  - Changes with physical environment

WORK COMPLETED

The first twelve months of this project will be dedicated to our first objective – developing new acoustic tools to measure aggregations of fish. We are working on two approaches – integration of a high frequency water column multibeam sonar on autonomous underwater vehicle (AUV) and development of a mid-frequency multibeam system.

High frequency water column multibeam sonar

Simrad and OSU have been working together to adapt an existing instrument package to the specific needs of the AUV. Delivery of the instrument is anticipated within the next month. The development of a new telemetry system has begun to allow autonomous operation of the instrument inside the AUV. Power and payload issues are currently being considered by Rutgers and OSU along with the REMUS development team.

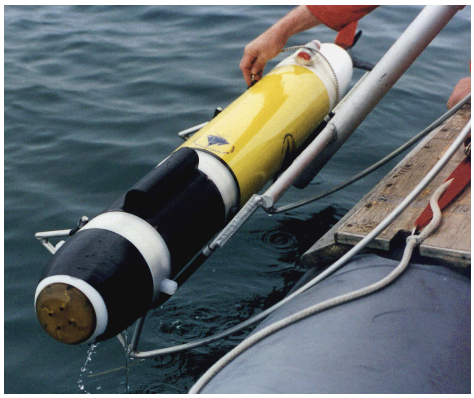

Figure 1. A REMUS vehicle being recovered at the end of a mission in the Mid-Atalntic Bight.

Figure 2. The Kongsberg Simrad Mesotech water column multibeam that is being redesigned to work autonomously inside a REMUS

Development of a mid-frequency multibeam system

APL-UW has begun the design and fabrication of the mid-frequency multi-beam sonar. Initial system fabrication will be completed in winter/spring 2006. Testing in local waters will be done in spring 2006. After detailed discussions of the experiment and initial design/modeling results, one significant change has been made to the proposed multi-beam system. Instead of a linear array of receiving hydrophones a circular array will be used. Figure 1 illustrates an assembly drawing of the new array configuration, including the circular receiving array and the linear omni-directional transmit array. The circular configuration will be deployable from small ships, utilizing minimal deck space and man-power. A linear array configuration (as initially proposed) would require a complex deployment to maintain the array in the desired direction, requiring significantly more deck space (because it would be 3 meters long), and potentially require special winches and cables. The circular array design will image a 360 degree sector simultaneously (doesn't need to be pointed in a particular direction). It is also much smaller (~1.5 meters in diameter) and designed to be deployed from a standard CTD winch

and cable. High-resolution imaging (with a greatly increased imaging volume from the initial plans) has required increasing the number of hydrophones in the system. This is made possible by using more cost effective hydrophones than initially considered (the price decreased from $1000 per unit to $100). The system will be reconfigurable to include up to 96 receiving hydrophones. The nominal number of receiving hydrophones used will be 64, creating beams with a 5 degree horizontal resolution, as illustrated in Figure 2. The vertical imaging resolution of the system (as illustrated in the profile view of Figure 4) is defined by the intersection of the receiver and transmitter beams. Therefore, vertical imaging resolution can be achieved by either steering the narrow transmit beam in elevation or by moving the whole system up and down through the water column (like a profiler).

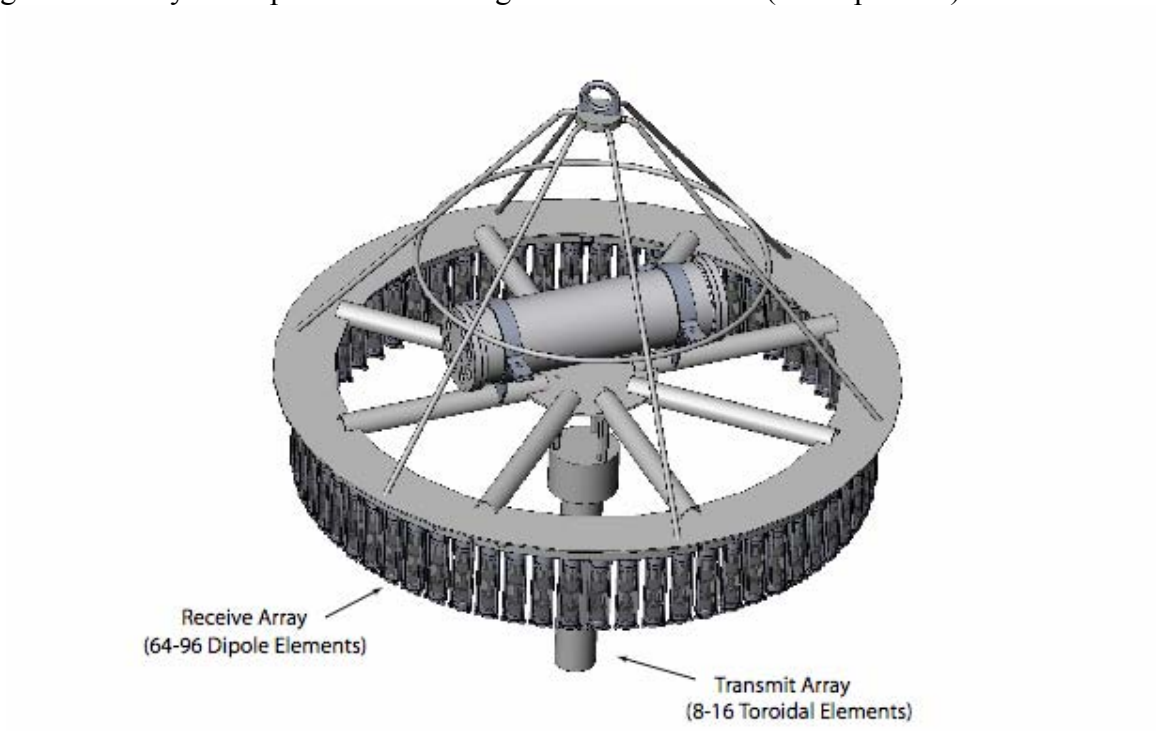

Figure 3: Mechanical illustration of the circular mid-frequency imaging system showing the geometry of receive and transmit hydrophones and the single cable deployment configuration.

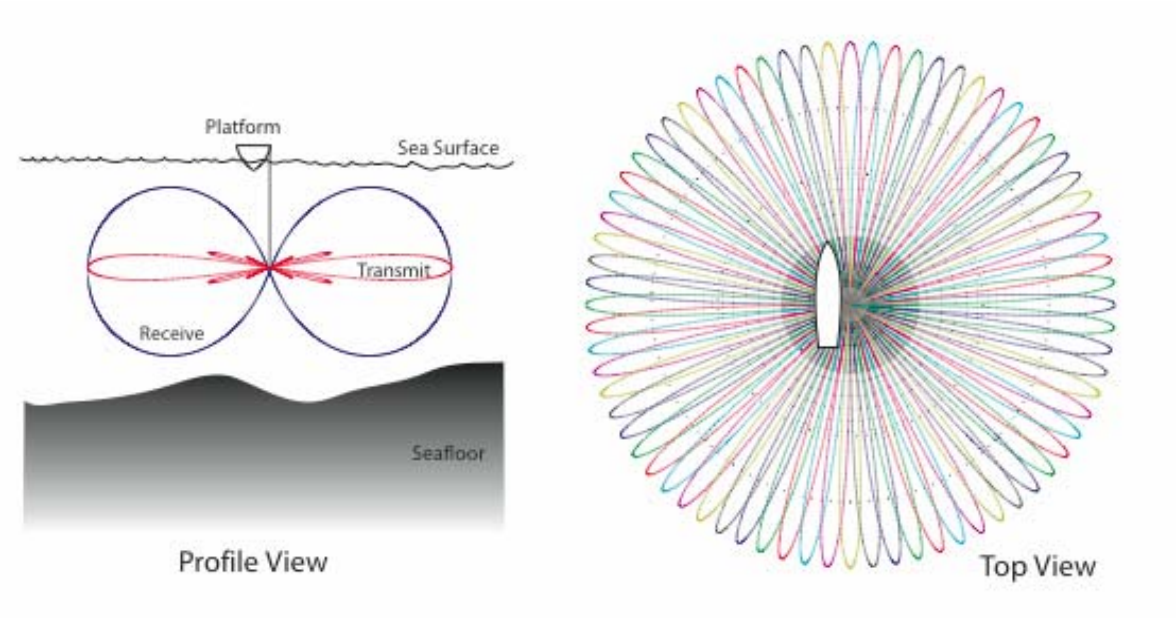

Figure 4: Deployment geometry and imaging volume of the mid-frequency circular array illustrating the receive and transmit beams patterns.

RESULTS

Fieldwork for testing the new equipment is planned for September/October of 2006 followed by more extensive data collection in the Summer of 2007. Both the APL/UW team and the OSU team in collaboration with Simrad made significant progress towards our development and deployment goals. A series of field deployments were conducted in spring and summer 2005 by the Rutgers team to prepare for field operations in 2006. Field surveys were anchored with satellites, CODAR, gliders and ships. During spring 2005 a warm core ring interacted with the shelf-slope front, as series of large amplitude meanders in the front on the northern side of the ring, submesoscale eddies in southward flowing cold water, and the cross-shelf Hudson plume transport pathway along the southern flank of the Hudson shelf valley (Figure 5). The temperature, salinity, density and sound speed sections from this mission highlighted the rapid space-time variability of the system and the corresponding impact on the acoustic uncertainity. The last column of Figure 4 is concurrent with the satellite image, and the glider is approaching an onshore crest in the meandering shelf-slope surface front. The 8-9 C surface water in the satellite image appears in the glider section as a thin surface layer with the 8 C cold pool water on the far right shoreward side, and warmer/saltier slope water on the offshore side. Density plots indicate that the complex temperature and salinity distributions in the water column are indeed stable. The resulting sound speed structure reflects these complexities, producing sound speed profiles with the maximum at mid-depth and a minimum near the surface. The first column of Figure 6 is the glider CTD section one week prior to the satellite image and slightly farther north. In this section, the cold pool occupies nearly the entire section, indicating it is likely in an offshore meander trough. Most of the sound speed profiles in this section now have a middepth minimum and a surface maximum. The cross-shelf structure, however, is complicated by the narrow filament of warm salty water that extends upward through the full water column above the 90 m isobath. The filament is only a few kilometers wide, is stably stratified, but introduces a dramatic sound speed anomaly in an otherwise more uniform transect. In addition to scouting potential field locations, during this deployment

fishermen repeateldy requested that this site be highlighted on the Web to imporve their efforts at the shelf slope front to their bottom line. This interest mirrors historical fishing patterns on the Mid-Atlantic Bight. Thus this field site provides a complex region of high fish yields and also high ONR interest. This site will be the focus of the ONR sponsored SW-06 acoustic uncertianity experiments.

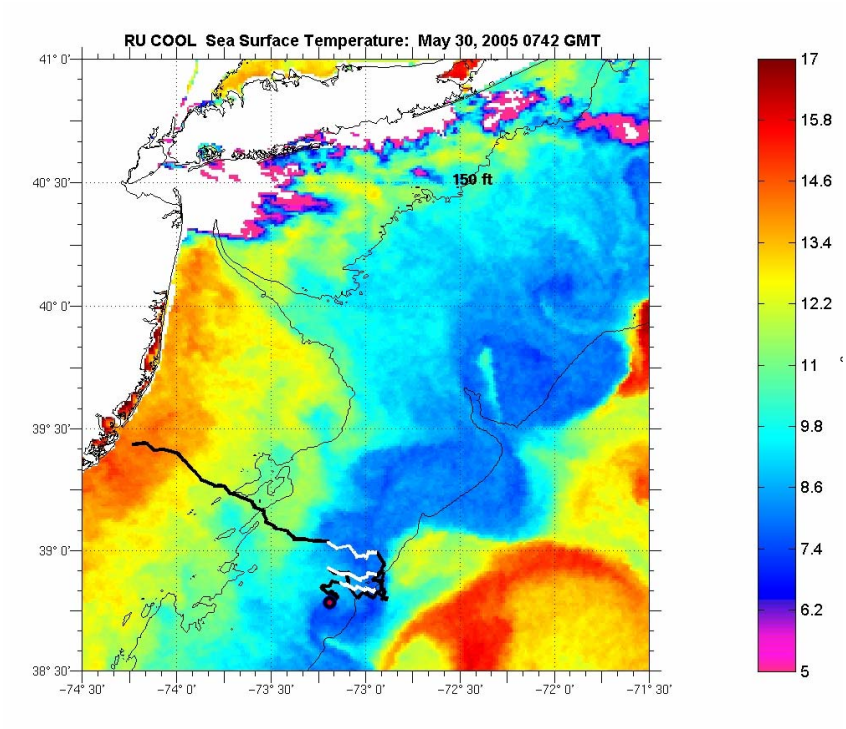

Figure 3. SST image from May 30, 2005 with the with May-June glider track superimposed. The three white segments of the glider tracks displayed in figure 5.

.

IMPACT/APPLICATIONS

The distribution of fish and the variability in their distribution has implications for fisheries, stock assessment, and operational acoustic techniques. This is particularly true in continental shelf regions where fish densities are high and their distribution is highly patchy. This work will provide basic information on the structure of fish aggregations, the effects of fish aggregations on both mid and high frequency acoustics, and the relationship between mid frequency acoustic scattering and more traditional, relatively well-understood high frequency acoustic scattering. In addition, we will examine the correlation between fish, important biological sources of acoustic scattering, and environmental variability by utilizing the existing resources of the New Jersey Shelf Observing System (NJ SOS). An understanding of the relationship between fish and their habitat will provide the opportunity to make predictions about the distribution of fish aggregations at the scale of the study region and the distribution of fish within an individual aggregation. This will contribute to our efforts model scattering from biological sources. We expect this work will allow us to develop new acoustic techniques, that expand our understanding of the basic biology of fish, understand the relationship between fish aggregation characteristics and acoustic scattering at mid and high frequencies, relate more traditional high frequency techniques to more complex scattering at mid frequencies, and explore the potential of mid frequencies in both direct and waveguide scattering for application to fish.

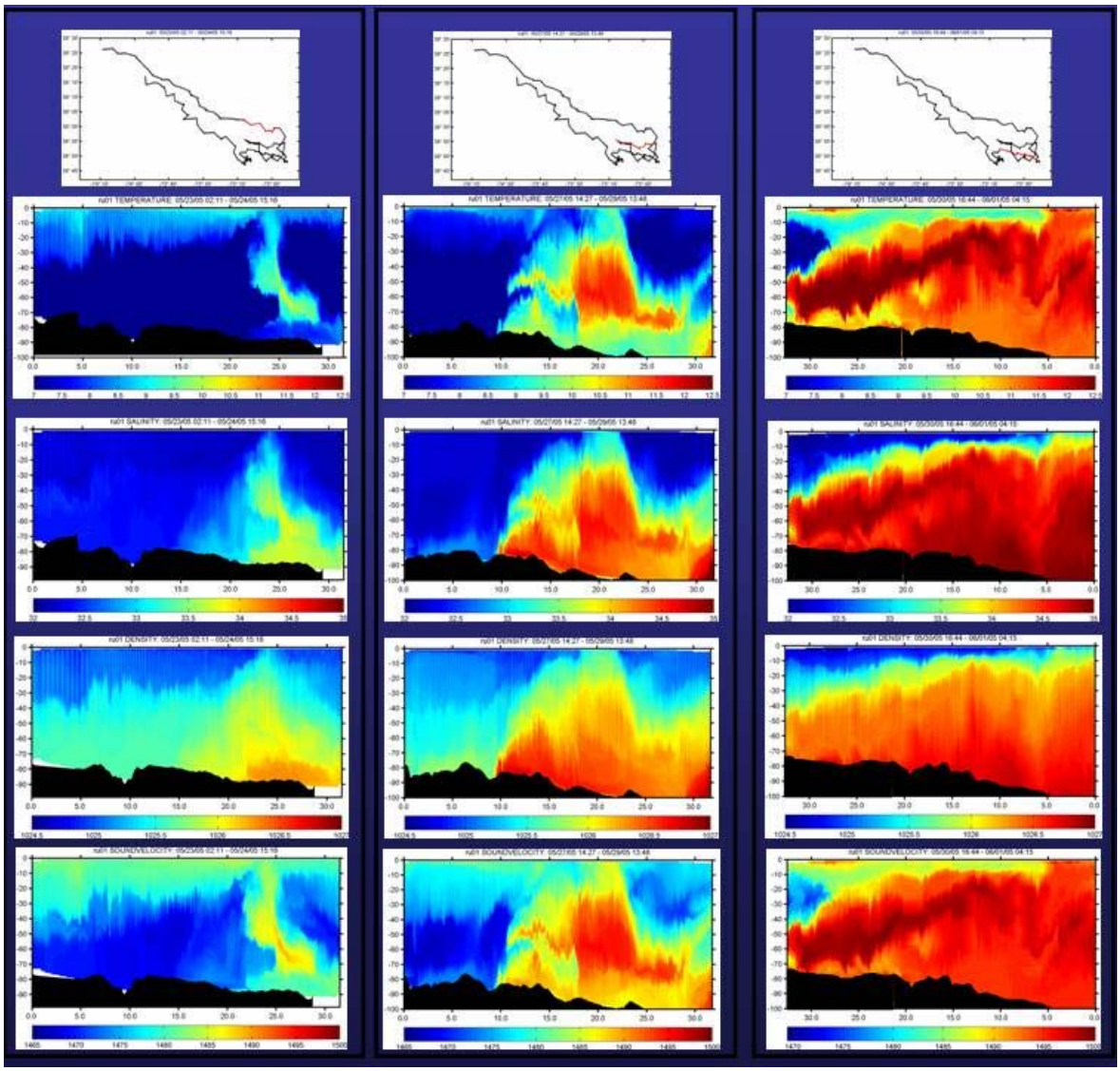

Figure 6. Three CTD transects from the May-June 2005 outer shelf glider deployment. Row 1: transect location in red; Row 2: temperature; Row 3: Salinity, Row 4: density; and Row 5: sound speed.

REFERENCES

Pitcher, T. J., and J. K. Parrish. 1993. Function of shoaling behavior in teleosts, p. 363-439. In T. J. Pitcher [eds], Behavior of teleost fishes. Chapman and Hall.

Turchin, P. 1989. Population consequences of aggregative movement. J. Anim. Ecol. ***58:*** *75-100.*