DISTRIBUTION STATEMENT A: Approved for public release; distribution is unlimited.

MURI: Impact of Oceanographic Variability on Acoustic Communications

W.S. Hodgkiss
Marine Physical Laboratory
Scripps Institution of Oceanography
La Jolla, CA 92093-0701
phone: (858) 534-1798 / fax: (858) 822-0665
email: whodgkiss@ucsd.edu

Award Number: N00014-07-1-0739
http://www.mpl.ucsd.edu

LONG-TERM GOALS

Couple together analytical and numerical modeling of oceanographic and surface wave processes, acoustic propagation modeling, statistical descriptions of the waveguide impulse response between multiple sources and receivers, and the design and performance characterization of underwater acoustic digital data communication systems in shallow water.

OBJECTIVES

Develop analytical/numerical models, validated with experimental data, that relate short-term oceanographic variability and source/receiver motion to fluctuations in the waveguide acoustic impulse response between multiple sources and receivers and ultimately to the capacities of these channels along with space-time coding and adaptive modulation/demodulation algorithms that approach these capacities.

APPROACH

The focus of this research is on how to incorporate an understanding of short-term variability in the oceanographic environment and source/receiver motion into the design and performance characterization of underwater acoustic, diversity-exploiting, digital data communication systems. The underlying physics must relate the impact of a fluctuating oceanographic environment and source/receiver motion to fluctuations in the waveguide acoustic impulse response between multiple sources and receivers and ultimately to the channel capacity and the design and performance characterization of underwater acoustic digital data communication systems in shallow water. Our approach consists of the following thrusts.

1. Modeling short-term variability in the oceanographic environment.

The long-term (beyond scales of minutes) evolution of the physical oceanographic environment (e.g. due to currents and long period internal waves) imparts slow changes to the waveguide acoustic propagation characteristics. In contrast, surface waves driven by local winds and distant storms exhibit

dynamics on much shorter scales (seconds to tens of seconds) and directly impact short-term acoustic fluctuations. In addition, shorter-period internal waves, finestructure, and turbulence also will contribute to propagation variability. An important question is the relative impact each of these has on short-term acoustic fluctuations. Here we will couple models of the background time-evolving oceanographic environment with models of the surface wave dynamics to provide realistic sound speed fields along with their spatiotemporal correlation structure.

2. Transformation of environmental fluctuations and source/receiver motion into waveguide acoustic impulse response fluctuations between multiple sources and receivers.

Both ray-based (Sonar Simulation Toolset and Bellhop) and full-wave (Parabolic Equation) propagation modeling methods will be used to transform simulated sound speed fields, surface wave dynamics, and source/receiver motion directly into dynamic acoustic pressure fields. A Monte Carlo approach will be used to simulate realistic time-varying impulse responses between multiple sources and receivers. As an alternative, adjoint methods quantify the sensitivity of the channel impulse response to oceanographic (and geometric) variability. The linear approximation inherent in the sensitivity kernel may be valid for only a limited dynamic range of the environmental fluctuations corresponding to just a few seconds at the frequencies of interest but might provide useful insight into the mapping between environmental and acoustic fluctuations and subsequently to estimating the environmentally-dependent acoustic channel capacity.

3. Spatiotemporal statistical descriptions of waveguide impulse response fluctuations.

Statistical descriptions summarizing the spatiotemporal relatedness of waveguide impulse response fluctuations provide insight into the influence of environmental dynamics and can be used for system design and performance evaluation purposes. The scattering function provides a useful description of the channel in time delay and Doppler. In addition to estimating the scattering function from ensembles of realizations of fluctuating impulse responses (either from realistic simulations or at-sea observations), we also will use the sensitivity kernel for the impulse response combined with the dynamics and statistics of the environmental fluctuations to estimate the scattering function.

4. Channel capacity and the design and performance characterization of underwater acoustic, diversity-exploiting, digital data communication systems.

Channel capacity sets an upper bound on the information rate that can be transmitted through a given channel. The capacity of the highly dispersive and fluctuating ocean environment cannot be derived in closed form but only simulated or derived from measurements. In addition, realistic (constrained) capacity bounds will be derived that include practical implementation issues such as those imposed by phase-coherent constellations and realizable equalization schemes. Based on multiple source and receiver channel models developed from measured waveguide characteristics, we will assess the capacity of underwater acoustic channels and these will serve as goals for the design of space-time coding techniques and adaptive modulation/demodulation algorithms. An especially challenging problem in multipath-rich waveguides is the design of coherent communication schemes between moving platforms.

5. Benchmark simulations and validating experimental data.

A set of benchmark simulation cases will be defined for use in exploring transmitter/receiver design and performance characterization in the deployment of diversity-exploiting digital data telemetry

systems (point-to-point and networked). Both fixed-fixed (stationary) and moving source and/or receiver scenarios will be considered across bands of frequencies in the range 1-50 kHz. Multiple source and receiver cases (MIMO) will be of particular interest. Validating experimental data will be obtained during the ONR acoustic communications experiment in summer 2008 and other follow-on experiments to be scheduled in the future.

To address the issue of underwater acoustic digital data communication in a fluctuating environment, we have brought together a multidisciplinary research team consisting of oceanographers, ocean acousticians, and signal processors. Team members consist of faculty and researchers from four universities and unfunded collaborators from private industry and a navy laboratory:

- University of California, San Diego (UCSD) - W.S. Hodgkiss, W.A. Kuperman, H.C. Song, B.D. Cornuelle, and J.G. Proakis
- University of Washington (UW) - D. Rouseff and R. Goddard
- University of Delaware (UDel) - M. Badiey and J. Kirby
- Arizona State University (ASU) - T. Duman
- Heat, Light, and Sound (HLS) - M. Porter, P. Hursky, and M. Siderius (Portland State University)
- SPAWAR Systems Center – San Diego (SSC-SD) – V.K. McDonald and M. Stevenson

WORK COMPLETED

A shallow water acoustic communications experiment (KAM08) was conducted early summer 2008 off the western side of Kauai, Hawaii. Both fixed and towed source transmissions were carried out to multiple receiving arrays over ranges of 1-8 km. Substantial environmental data was collected including water column sound speed structure (CTDs and thermistor strings), water column current structure (ADCP), sea surface directional wave field (waverider buoy), and local wind speed and direction. Analysis of KAM08 data this past year has included both fixed and moving source transmissions. Environmental analysis has included assessing the effects of sea surface roughness on acoustic wave propagation through both ray and Parabolic Equation (PE) acoustic modeling. Communication receiver design has included processors for orthogonal frequency division multiplexing (OFDM) and multiple-input/multiple-output (MIMO) transmissions. Lastly, progress has been made on the characterization of channel capacity for sparse ISI channels.

Publications related to this MURI include journal articles [1-13] and conference publications [14-28].

RESULTS

A major obstacle to high-rate, shallow water acoustic communications is a large delay spread due to multipath propagation causing significant intersymbol interference (ISI), coupled with temporal variability of the channel. To simplify adaptive equalization, one approach is to use a multicarrier transmission, known as orthogonal frequency division multiplexing (OFDM) and widely used in RF wireless communications. The basic concept is to convert a single-carrier ISI channel into parallel ISI-

free subchannels. In addition, time-varying channels can be dealt with by updating the channel estimate on a block-by-block basis. However, it is known that OFDM is sensitive to Doppler effects since Doppler introduces a carrier frequency offset (CFO) and destroys orthogonality of the subchannels.

The Kauai Acomms MURI 2008 (KAM08) Experiment was conducted in shallow water west of Kauai, Hawaii, in an area of substantial daily oceanographic variability. OFDM transmissions were carried out during KAM08 at various source-receiving array ranges up to 8 km in 106 m deep water using an 8 kHz bandwidth (12-20 kHz) [13]. Fig. 1 shows the experiment set-up and an example of the observed channel responses from an 82.5 m deep source to a large-aperture, 16-element vertical receive array (VRA) at 8 km range. A delay spread of approximately 15 ms is observed.

Block diagrams of the OFDM transmitter and receiver are shown in Fig. 2. During transmit, an information bit sequence is low-density parity check (LDPC) coded and interleaved bitwise to produce codeword vectors. The sequence then is mapped into symbols using either QPSK or 16-QAM. The OFDM modulator consists of a serial-to-parallel converter, inverse fast Fourier transform, cyclic prefix adder, and upconverter. During receive, there are three major components: channel estimation, diversity combining, and iterative channel estimation coupled with LDCP decoding. Sparse channel estimation using orthogonal matching pursuit (OMP) is incorporated to further improve the performance. Maximal ratio combining is applied for diversity combining. Iterative channel estimation is applied in conjunction with LDPC decoding if necessary. The OFDM system specifications are provided in [13].

The element-level performance of OFDM at 8 km range is shown in Fig. 3. Included are the estimated signal-to-noise ratios, QPSK bit error rates (BERs), and 16-QAM BERs vs. depth along the VRA. Three approaches are compared: (1) no coding (o), (2) LDPC coding (□), and (3) iterative channel estimation combined with coding (+). The element-level results illustrate two major problems even with the use of coding: (1) SNRs are below threshold at the 8 km range and (2) lack of diversity to mitigate channel fading.

In contrast, the array performance at 8 km for QPSK and 16-QAM is shown in Fig. 4. Illustrated is the impact of diversity combining through adding elements sequentially starting from the bottom of the array (near the seafloor) and from the top of the array (near the sea surface). In general, the performance improves with an increase in diversity. However, the rate of improvement is substantially better when adding receiving elements from bottom-to-top which is a consequence of the higher SNRs in the deeper-depth portion of the array. For QPSK, the improvement with iterative processing is minimal since LDPC coding alone is sufficient to achieve error-free reception. However, the iterative approach significantly improves the performance of 16-QAM.

In summary, error-free transmission using 16-QAM modulation was demonstrated at 8 km range at a data rate of 10 kbps.

IMPACT / APPLICATIONS

Acoustic data communications is of broad interest for the retrieval of environmental data from in situ sensors, the exchange of data and control information between AUVs (autonomous undersea vehicles) and other off-board/distributed sensing systems and relay nodes (e.g. surface buoys), and submarine communications.

RELATED PROJECTS

In addition to other ONR Code 322OA and Code 321US projects investigating various aspects of acoustic data communications from both an ocean acoustics and signal processing perspective, a second MURI also is focused on acoustic communications (J. Preisig, "Underwater Acoustic Propagation and Communications: A Coupled Research Program").

PUBLICATIONS

Journals

[1] A. Song, M. Badiey, H.C. Song, W.S. Hodgkiss, M.B. Porter, and the KauaiEx Group, "Impact of ocean variability on coherent underwater acoustic communications during the Kauai experiment (KauaiEx)," J. Acoust. Soc. Am. 123(2): 856-865, DOI: 10.1121/1.2828055 (2008). [published, refereed]

[2] K. Raghukumar, B.D. Cornuelle, W.S. Hodgkiss, and W.A. Kuperman, "Pressure sensitivity kernels applied to time-reversal acoustics," J. Acoust. Soc. Am. 124(1): 98-112, DOI: 10.1121/1.2924130 (2008). [published, refereed]

[3] M. Siderius and M.B. Porter, "Modeling broadband ocean acoustic transmissions with time-varying sea surfaces," J. Acoust. Soc. Am. 124(1): 137-150, DOI: 10.1121/1.2920959 (2008). [published, refereed]

[4] P. Roux, B.D. Cornuelle, W.A. Kuperman, and W.S. Hodgkiss, "The structure of ray-like arrivals in a shallow water waveguide," J. Acoust. Soc. Am. 124(6): 3430-3439, DOI: 10.1121/1.2996330 (2008). [published, refereed]

[5] S. Roy, T.M. Duman, and V.K. McDonald, "Error rate improvement in underwater MIMO communications using sparse partial response equalization," IEEE J. Oceanic Engr. 34(2): 181-201, DOI: 10.1109/JOE.2009.2014658 (2009). [published, refereed]

[6] D. Rouseff, M. Badiey, and A. Song, "Effect of reflected and refracted signals on coherent underwater acoustic communication: Results from KauaiEx 2003," J. Acoust. Soc. Am. 126(5): 2359-2366, DOI: 10.1121/1.3212925 (2009). [published, refereed]

[7] A. Song, M. Badiey, H.C. Song, W.S. Hodgkiss, "Impact of source depth on coherent underwater acoustic communications (L)," J. Acoust. Soc. Am. 128(2): 555-558, DOI: 1121/1.3459843 (2010). [published, refereed]

[8] K. Raghukumar, B.D. Cornuelle, W.S. Hodgkiss, and W.A. Kuperman, "Experimental demonstration of the utility of pressure sensitivity kernels in time-reversal," J. Acoust. Soc. Am. 128(3): 989-1003, DOI: 10.1121/1.3466858 (2010). [published, refereed]

[9] H.C. Song, J.S. Kim, W.S. Hodgkiss, and J.H. Joo, "Crosstalk mitigation using adaptive time reversal," J. Acoust. Soc. Am. 127 (2): EL19-EL22, DOI: 1121/1.3280234 (2010). [published, refereed]

[10] K. Sabra, H.C. Song, and D. Dowling, "Ray-based blind deconvolution in ocean sound channel," J. Acoust. Soc. 127 (2): EL42-EL47, DOI: 1121/1.3284548 (2010). [published, refereed]

[11] H.C. Song, W.S. Hodgkiss, and P.A. van Walree, "Phase-coherent communications without explicit phase tracking (L)," J. Acoust. Soc. Am. 128 (3): 969-972, DOI: 1121/1.3466860 (2010). [published, refereed]

[12] Kai Tu, Dario Fertonani, Tolga M. Duman, Milica Stojanovic, John G. Proakis, and Paul Hursky, "Mitigation of Intercarrier Interference for OFDM over Time-Varying Underwater Acoustic Channels," IEEE J. Oceanic Engr. (2010). [in press, refereed]

[13] T. Kang, H.C. Song, W.S. Hodgkiss, and J.S. Kim, "Long-range multi-carrier acoustic communications in shallow water based on iterative sparse channel estimation," J. Acoust. Soc. Am. (2010). [accepted, refereed]

Conferences

[14] D. Rouseff, M. Badiey and A. Song, "Propagation physics effects on coherent underwater acoustic communications: Results from KauaiEx 2003" Proc. OCEANS 2007: 1-4, DOI: 10.1109/OCEANSE.2007.4302269 (2007). [published]

[15] M. Badiey, A. Song, D. Rouseff, H. Song, W. S. Hodgkiss, and M. B. Porter, "Ocean variability effects on high-frequency acoustic propagation in KauaiEx" Proc. OCEANS 2007: 1-5, DOI: 10.1109/OCEANSE.2007.4302411 (2007). [published]

[16] A. Song, M. Badiey, D. Rouseff, H. Song, and W. S. Hodgkiss, "Range and depth dependency of the coherent underwater acoustic communications in KauaiEx," Proc. OCEANS 2007: 1-6, DOI: 10.1109/OCEANSE.2007.4302372 (2007). [published]

[17] Yunus Emre, Vinod Kandasamy, Tolga M. Duman, Paul Hursky and Subhadeep Roy, "Multi-Input Multi-Output OFDM for Shallow-Water UWA Communications," Proc. Acoustics 2008: 1-6 (2008). [published]

[18] Sanjay Mani, Tolga M. Duman and Paul Hursky, "Adaptive Coding/Modulation for Shallow-Water UWA Communications," Proc. Acoustics 2008: 1-6 (2008). [published]

[19] A. Song, M. Badiey, and V. K. McDonald, "Multichannel combining and equalization for underwater acoustic MIMO channels", Proc. OCEANS 2008: 1-6, DOI: 10.1109/OCEANS.2008.5152115 (2008). [published]

[20] K. Tu, D. Fertonani, T.M. Duman, and P. Hursky, "Mitigation of intercarrier interference in OFDM systems over underwater acoustic channels," OCEANS 2009 – Europe: 1-6, DOI: 10.1109/OCEANSE.2009.5278270 (2009). [published]

[21] A. Radosevic, J.G. Proakis, and M. Stojanovic, "Statistical characterization and capacity of shallow water acoustic channels," Proc. OCEANS 2009 – Europe: 1-8, DOI: 10.1109/OCEANSE.2009.5278349 (2009). [published]

[22] Andreja Radosevic, Dario Fertonani, Tolga M. Duman, John G. Proakis, Milica Stojanovic, "Capacity of MIMO Systems in Shallow Water Acoustic Channels," Proc. Asilomar Conf. Signals, Systems and Computers: 1-5 (2009). [published]

[23] N. F. Josso, J. J. Zhang, D. Fertonani, A. Papandreou-Suppappola and T. M. Duman, "Time-Varying Wideband Underwater Acoustic Channel Estimation for OFDM Communications," Proc. ICASSP 2010: 5626-5629, DOI: 10.1109/ICASSP.2010.5495257 (2010). [published]

[24] T. Kang, H.C. Song, and W.S. Hodgkiss, "Experimental results of multicarrier communications in shallow water," Proc. 10th European Conference on Underwater Acoustics: 939-944 (2010). [published]

[25] W.S. Hodgkiss and J.D. Skinner, "A multichannel software-defined acoustic modem," Proc. 10th European Conference on Underwater Acoustics: 945-950 (2010). [published]

[26] P. van Walree, T. Jenserud, and H.C. Song, "Characterization of overspread acoustic communication channels," Proc. 10th European Conference on Underwater Acoustics: 951-958 (2010). [published]

[27] Kai Tu, Dario Fertonani and Tolga M. Duman, "OFDM Receiver for Underwater Acoustic Channels with Non-Uniform Doppler Arrivals," Proc. 10th European Conference on Underwater Acoustics: 973-978 (2010). [published]

[28] H.C. Song, J.S. Kim, and W.S. Hodgkiss, "Crosstalk mitigation in multiuser communications," Proc. 10th European Conference on Underwater Acoustics: 1005-1009 (2010). [published]

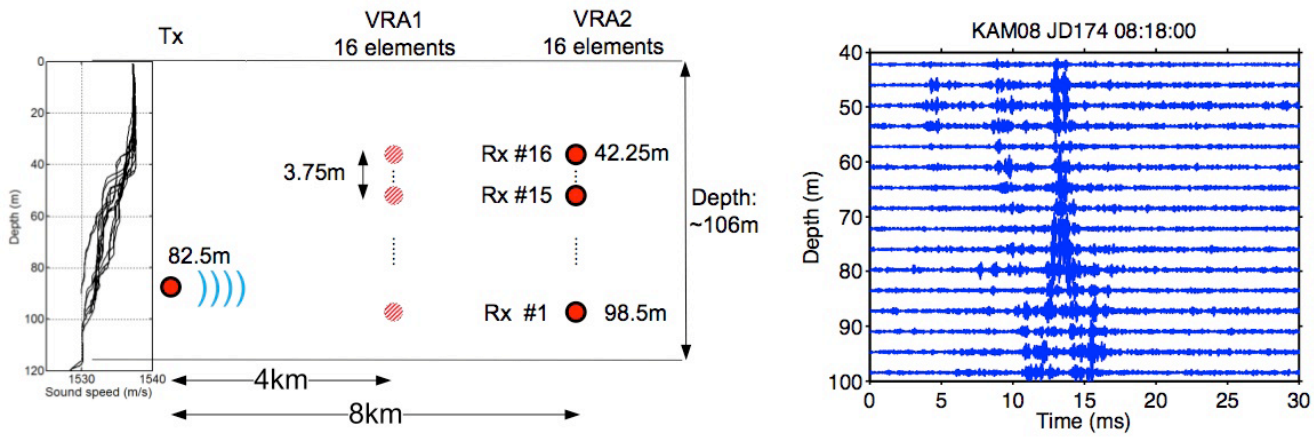

Figure 1. Acoustic communications in shallow water west of Kauai. (a) Water column sound speed structure. (b) Schematic of the KAM08 experiment showing the source at 82.5 m depth and 16-element vertical receive arrays moored in 106 m deep water at ranges of 4 km and 8 km. (c) An example of the channel responses observed at the VRA at 8 km range.

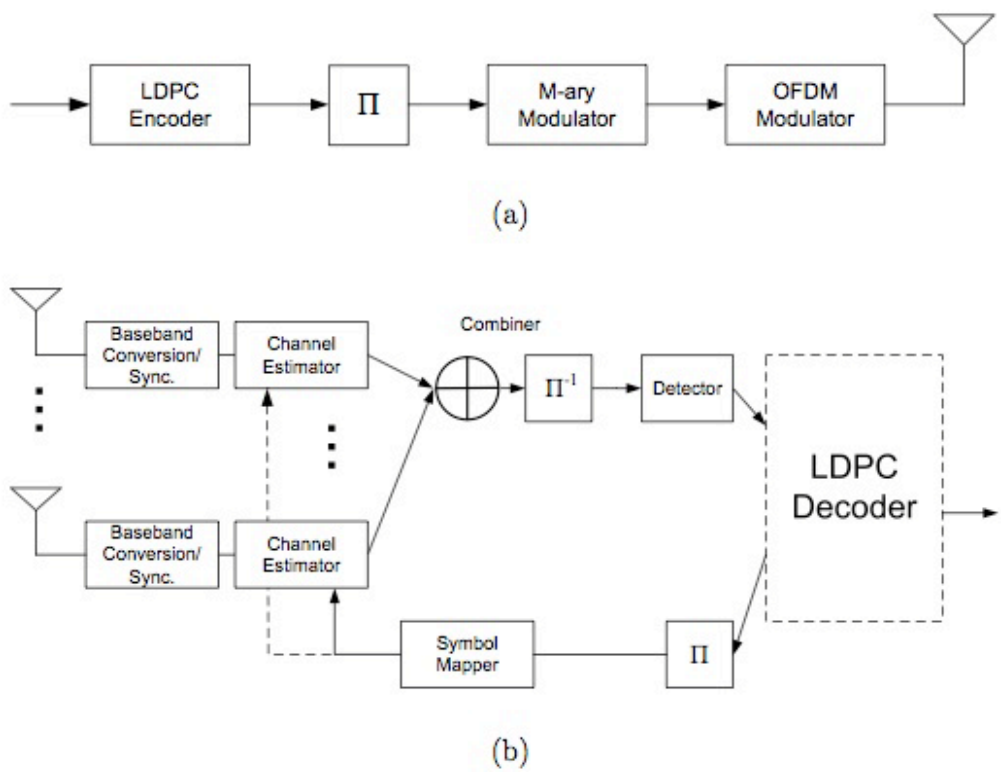

Figure 2. Block diagrams of the OFDM transmitter and receiver. (a) Transmitter. (b) Receiver.

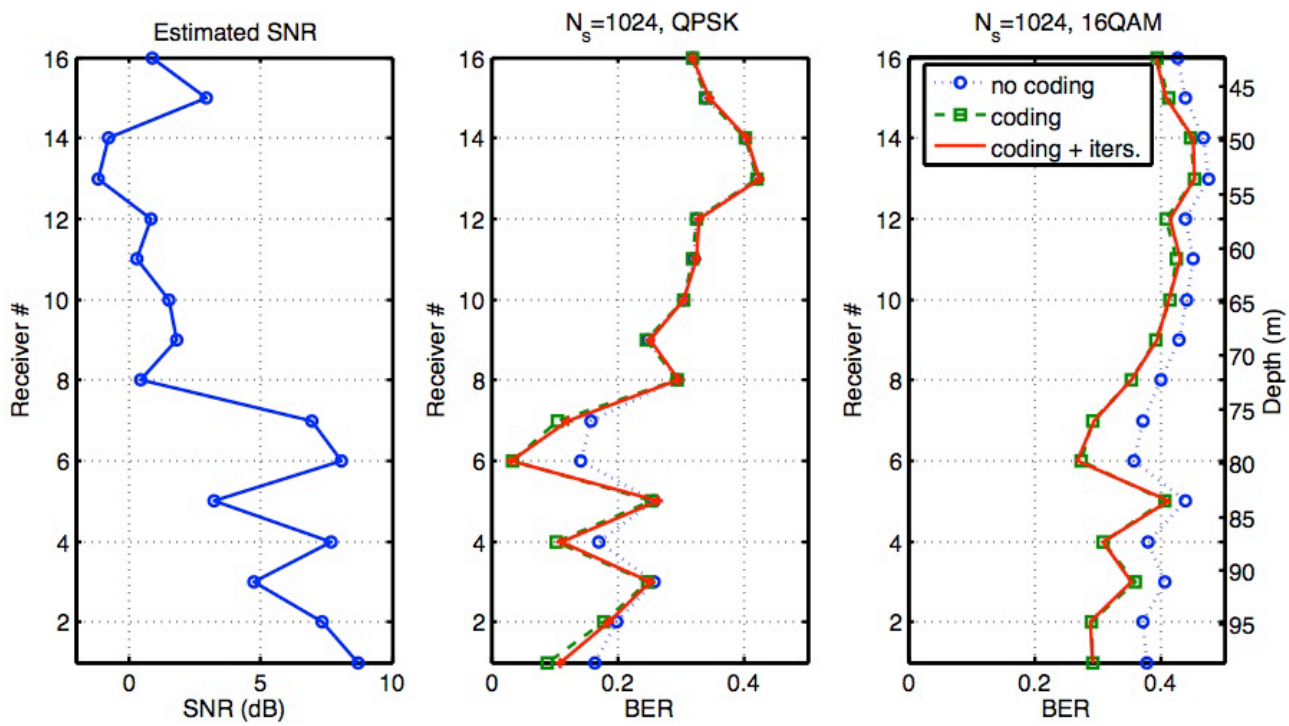

Figure 3. Element-level performance. (a) Estimated signal-to-noise ratio (SNR) vs. depth. (b) QPSK BER vs. depth. (c) 16-QAM BER vs. depth.

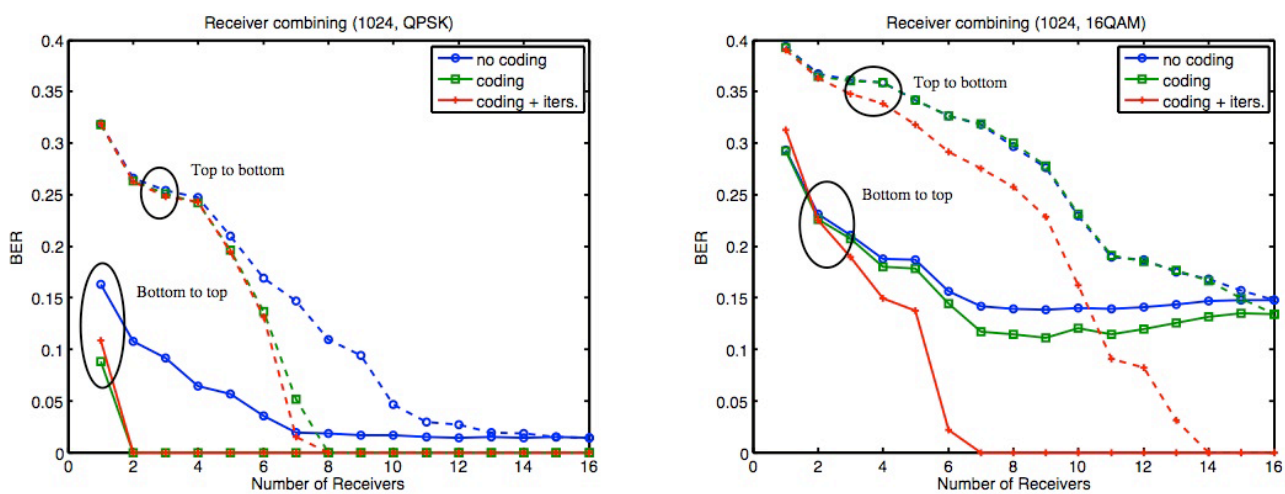

Figure 4. Array performance with receive elements combined sequentially from bottom-to-top and top-to-bottom. (a) QPSK BER vs. number of receive elements combined. (b) 16-QAM BER vs. number of receive elements combined. Bottom of the array is near the seafloor.